Homelite®

OPERATOR'S MANUAL

26cc MightyLite Blower/Vac

UT08550/UT08951

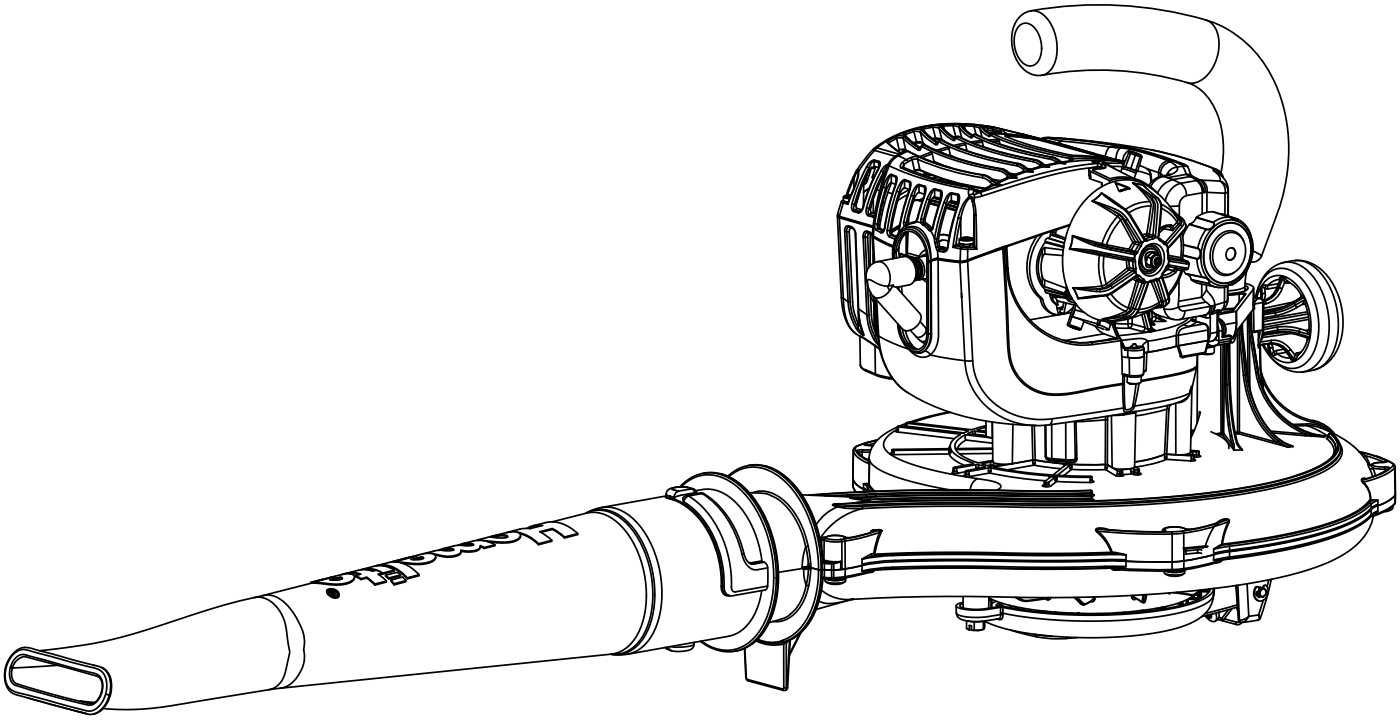

Your blower/vac has been engineered and manufactured to Homelite's high standard for dependability, ease of operation, and operator safety. When properly cared for, it will give you years of rugged, trouble-free performance.

WARNING: To reduce the risk of injury, the user must read and understand the operator's manual before using this product.

Thank you for buying a Homelite product.

SAVE THIS MANUAL FOR FUTURE REFERENCE

TABLE OF CONTENTS

- Introduction 2
- General Safety Rules 3
- Specific Safety Rules 4
- Symbols 5-6
- Features 7-8
- Assembly 8-10
- Operation 11-14
- Maintenance 15-16
- Troubleshooting 17
- Warranty 18-20
- Parts Ordering / Service ..... Back Page

INTRODUCTION

This product has many features for making its use more pleasant and enjoyable. Safety, performance, and dependability have been given top priority in the design of this product making it easy to maintain and operate.

GENERAL SAFETY RULES

WARNING:

READ AND UNDERSTAND ALL INSTRUCTIONS. Failure to follow all instructions listed below, may result in electric shock, fire and/or serious personal injury.

SAVE THESE INSTRUCTIONS

- Do not allow children or untrained individuals to use this unit.
- Never start or run the engine inside a closed area; breathing exhaust fumes can kill.
- Wear eye protection which is marked to comply with ANSI Z87.1 as well as hearing protection when operating this product.
- Keep all bystanders, children, and pets at least 50 ft. away.
- Wear heavy long pants, boots, and gloves. Do not wear loose fitting clothing, short pants, jewelry of any kind, or go barefoot.
- To reduce the risk of injury associated with objects being drawn into rotating parts, do not wear loose clothing, scarves, neck chains, and the like.
- Secure long hair so it is above shoulder level to prevent entanglement in any rotating parts.
- Do not operate this unit when you are tired, ill, or under the influence of alcohol, drugs, or medication.
- Do not operate in poor lighting.
- Keep all parts of your body away from any moving parts and all hot surfaces of the unit.
- Wear a face filter mask in dusty conditions to reduce the risk of injury associated with the inhalation of dust.
- Check the work area before each use. Remove all objects such as rocks, broken glass, nails, wire, or string which can be thrown or become entangled in the machine.
- Keep firm footing and balance. Do not overreach. Overreaching can result in loss of balance or exposure to hot surfaces.
- Never operate the unit without a spark arrestor screen; this screen is located inside the muffler.
- Product users on United States Forest Service land, and in some states, must comply with fire prevention regulations. This product is equipped with a spark arrestor; however, other user requirements may apply. Check with the federal, state, or local authorities in your area.
- Before storing, allow the engine to cool.
- Empty fuel tank and restrain the unit from moving before transporting in a vehicle.
- To reduce the risk of fire and burn injury, handle fuel with care. It is highly flammable.
- Do not smoke while handling fuel.
- Mix and store fuel in a container approved for gasoline.
- Mix fuel outdoors where there are no sparks or flames.
- Select bare ground, stop engine, and allow to cool before refueling.
- Loosen fuel cap slowly to release pressure and to keep fuel from escaping around the cap.
- Tighten the fuel cap securely after refueling.
- Wipe spilled fuel from the unit. Move 30 ft. away from refueling site before starting engine.
- Never attempt to burn off spilled fuel under any circumstances.
- Use only identical manufacturer's replacement parts and accessories. Use of any other parts may create a hazard or cause product damage.
- Maintain the unit per maintenance instructions in this Operator's Manual.
- Inspect the unit before each use for loose fasteners, fuel leaks, etc. Replace damaged parts.

SPECIFIC SAFETY RULES

- Do not operate vacuum without vacuum bag installed; flying debris could cause serious injury. Always close vacuum bag completely before operating.
- Always hold the blower in your right hand, refer to the *Operation* section, later in this manual for additional information.
- To reduce the risk of hearing loss associated with sound level(s), hearing protection is required.
- Rotating impeller blades can cause severe injury. Stop the engine before opening the vacuum door or installing/changing tubes. Do not put hands or any other object into the vacuum tubes while they are installed on the unit.
- To reduce the risk of injury associated with contacting rotating parts, stop the engine before installing or removing attachments. Do not operate without guard(s) in place. Always disconnect the spark plug before performing maintenance or accessing any movable parts.
- Do not point the blower nozzle in the direction of people or pets.
- Never run the unit without the proper equipment attached.
- When used as a blower, always install the blower tubes. When used as a vacuum, always install the vacuum tubes and vacuum bag. Make sure the vacuum bag is completely zipped when the unit is running to avoid flying debris.
- Avoid situations that could catch the vacuum bag on fire. Do not operate near an open flame. Do not vacuum warm ash from fireplaces, barbeque pits, brush piles, etc. Do not vacuum discarded cigars or cigarettes unless the cinders are completely cool.

SYMBOLS

Some of the following symbols may be used on this product. Please study them and learn their meaning. Proper interpretation of these symbols will allow you to operate the product better and safer.

SYMBOL	NAME	EXPLANATION
	Safety Alert Symbol	Precautions that involve your safety.
	Read the Operator's Manual	To reduce the risk of injury, user must read and understand operator's manual before using this product.
	Eye and Hearing Protection	Wear eye protection which is marked to comply with ANSI Z87.1 as well as hearing protection when operating this equipment.
	Vacuum Door	Do not run unit while vacuum door is unsecured.
	Blower Tubes	Do not operate without tubes in place.
	Long Hair	Risk of long hair being drawn into air inlet.
	Loose Clothing	Risk of loose clothing being drawn into air intake.
	Gasoline and Lubricant	Use unleaded gasoline intended for motor vehicle use with an octane rating of 87 [(R + M) / 2] or higher. This product is powered by a 2-cycle engine and requires pre-mixing gasoline and 2-cycle lubricant.

SYMBOLS

The following signal words and meanings are intended to explain the levels of risk associated with this product.

SYMBOL	SIGNAL	MEANING
⚠	**DANGER:**	Indicates an imminently hazardous situation, which, if not avoided, will result in death or serious injury.
⚠	**WARNING:**	Indicates a potentially hazardous situation, which, if not avoided, could result in death or serious injury.
⚠	**CAUTION:**	Indicates a potentially hazardous situation, which, if not avoided, may result in minor or moderate injury.
	CAUTION:	(Without Safety Alert Symbol) Indicates a situation that may result in property damage.

SERVICE

Servicing requires extreme care and knowledge and should be performed only by a qualified service technician. For service we suggest you return the product to your nearest **AUTHORIZED SERVICE CENTER** for repair. When servicing, use only identical replacement parts.

⚠ WARNING:

To avoid serious personal injury, do not attempt to use this product until you read thoroughly and understand completely the operator's manual. If you do not understand the warnings and instructions in the operator's manual, do not use this product. Call Homelite customer service for assistance.

⚠ WARNING:

The operation of any power tool can result in foreign objects being thrown into your eyes, which can result in severe eye damage. Before beginning power tool operation, always wear safety goggles or safety glasses with side shields and, when needed, a full face shield. We recommend Wide Vision Safety Mask for use over eyeglasses or standard safety glasses with side shields. Always use eye protection which is marked to comply with ANSI Z87.1.

SAVE THESE INSTRUCTIONS

FEATURES

PRODUCT SPECIFICATIONS

Weight ..... 8.75 lbs.
Engine displacement 26cc
Air Velocity:
MPH 200
CFM 400

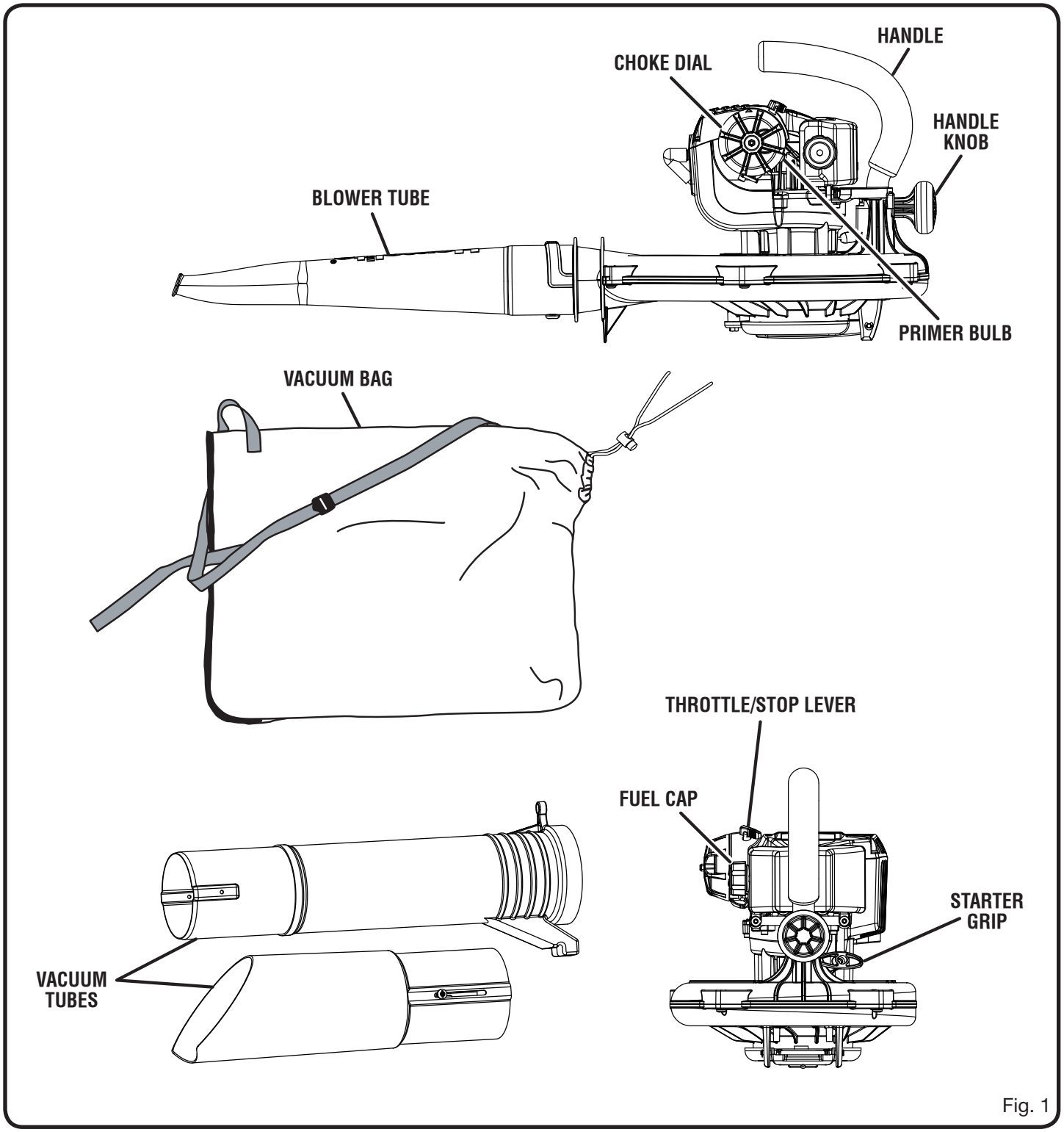

Fig. 1

FEATURES

KNOW YOUR BLOWER/VAC

See Figure 1.

The safe use of this product requires an understanding of the information on the tool and in this operator's manual as well as a knowledge of the project you are attempting. Before use of this product, familiarize yourself with all operating features and safety rules.

BLOWER TUBE

The blower tube can be installed on the blower without using tools.

MOTOR

The blower has a powerful 26cc engine with sufficient power to handle tough blowing and vacuuming jobs.

MULCHER

The blower is equipped with a mulcher feature that efficiently reduces leaves at a 12:1 ratio.

ROTOCHOKE™ ZIP START™

The rotochoke zip start allows for easier and quicker starting.

VACUUM

The blower will convert to a powerful vacuum/mulcher using no tools.

VACUUM BAG

The vacuum bag attaches to the blower easily and features a bottom zipper for convenient emptying.

VACUUM TUBES

The vacuum tubes install easily on the blower using only a flathead screwdriver.

ASSEMBLY

UNPACKING

This product requires assembly.

- Carefully remove the product and any accessories from the box. Make sure that all items listed in the packing list are included.
- Inspect the product carefully to make sure no breakage or damage occurred during shipping.
- Do not discard the packing material until you have carefully inspected and satisfactorily operated the tool.
- If any parts are damaged or missing, please call 1-800-242-4672 for assistance.

PACKING LIST

Blower

Blower Tube

Vacuum Tubes

Handle

Handle Knob

Vacuum Bag

2-Cycle Engine Lubricant

Operator's Manual

⚠ WARNING:

If any parts are damaged or missing do not operate this product until the parts are replaced. Failure to heed this warning could result in serious personal injury.

⚠ WARNING:

Do not attempt to modify this product or create accessories not recommended for use with this product. Any such alteration or modification is misuse and could result in a hazardous condition leading to possible serious personal injury.

ASSEMBLY

⚠ WARNING:

Stop the engine and disconnect the spark plug wire before installing parts, making adjustments, cleaning, or when not in use. Failure to do so could result in possible serious personal injury.

INSTALLING THE BLOWER TUBE

See Figure 2.

- Align the raised tabs on the main blower housing to the slots on blower tube; slide together and rotate tube clockwise to secure.
- To remove, rotate the blower tube counterclockwise to release.

INSTALLING THE HANDLE

See Figure 3.

- Place unit on a flat level surface.
- Insert handle into the hole on the base of the blower until the handle is fully seated.
- Insert handle knob and rotate clockwise to secure.

INSTALLING THE VACUUM BAG

See Figure 4.

- Rotate the blower tube counterclockwise and remove.
- Place the neck of the vacuum bag over the blower housing outlet until the drawstring area rests between the raised ribs.
- Squeeze the sides of the fastener with one hand while drawing the string tightly with the other until the bag is securely attached.
- Rotate the vacuum bag until the shoulder strap is upright.
- Make sure the vacuum bag is zipped and closed before starting the unit.

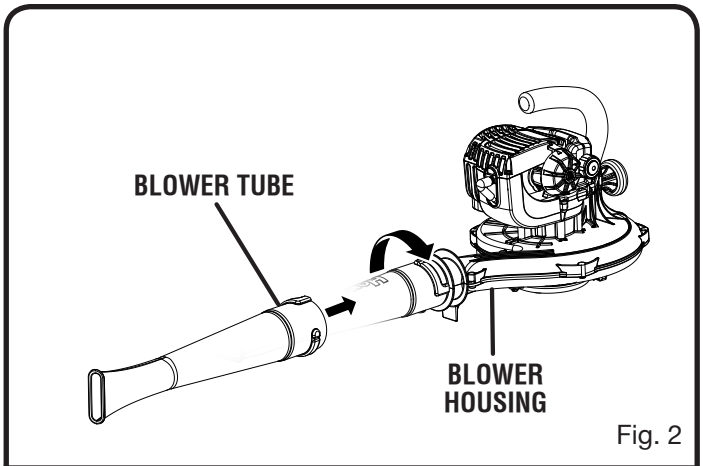

Fig. 2

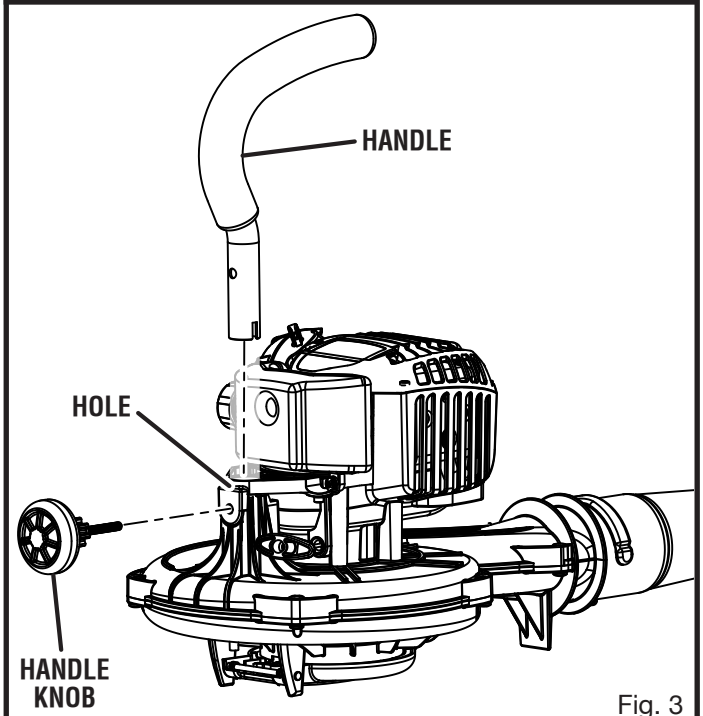

Fig. 3

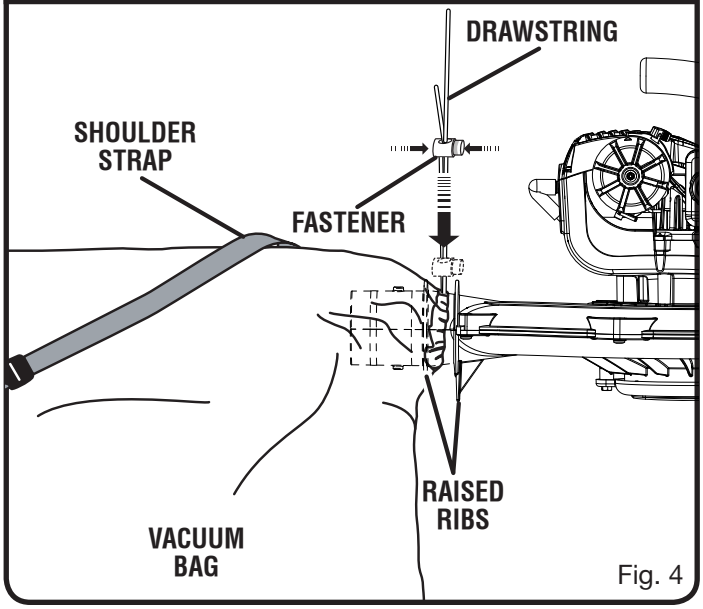

Fig. 4

INSTALLING THE VACUUM TUBES

See Figures 5 - 6.

⚠ WARNING:

Rotating impeller blades can cause severe injury. Always stop the engine before opening the vacuum door or installing/changing tubes. Do not put hands or any other object into the vacuum tubes while they are installed on the unit.

To install the vacuum tubes:

- Place the unit on its side to allow easy access to the vacuum door.
- Secure the upper and lower vacuum tubes together by aligning the raised locking tabs with the raised slots.
- Align the screw holes in the lower tube with the raised slot in the upper tube. Adjust the length and secure with supplied screws.
- Using a flathead screwdriver, rotate the screw securing the vacuum door counterclockwise to release.
- Place the lip on the upper vacuum tube beneath the hinge of the vacuum door. This will allow the screw on the other side to seat in the threaded hole.
- Using a flathead screwdriver, tighten the screw to secure.
- To remove the vacuum tubes, reverse the above steps.

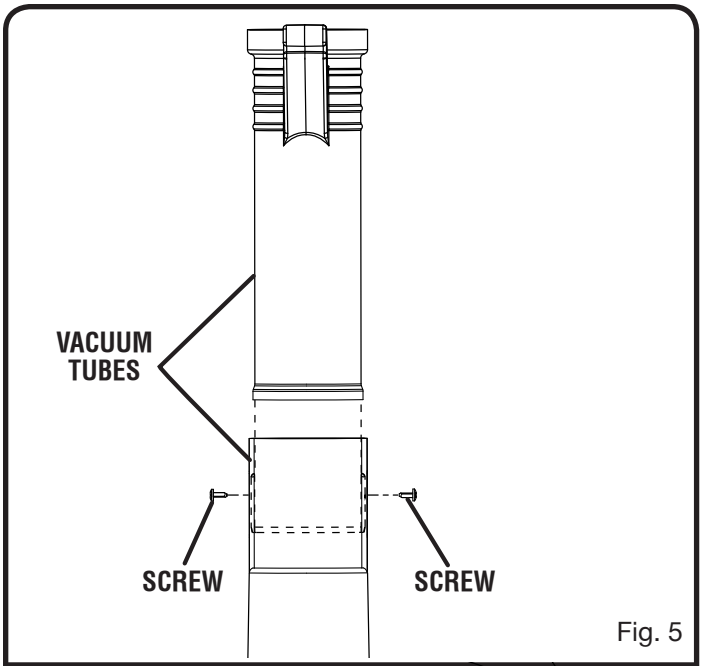

Fig. 5

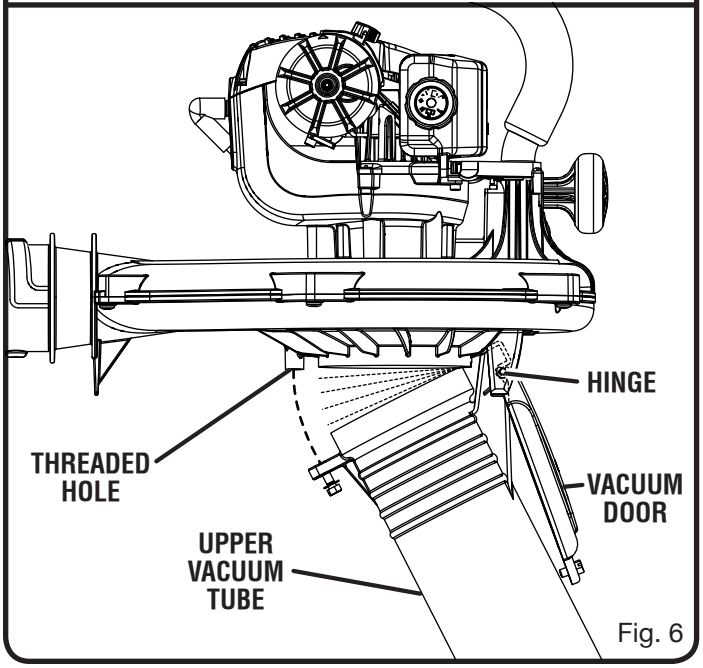

Fig. 6

OPERATION

WARNING:

Do not allow familiarity with tools to make you careless. Remember that a careless fraction of a second is sufficient to inflict serious injury.

WARNING:

Always wear safety goggles or safety glasses with side shields when operating this tool. Failure to do so could result in objects being thrown into your eyes resulting in possible serious injury.

APPLICATIONS

You may use this product for the purposes listed below:

- Clearing leaves and other debris from your lawn
- Keeping decks and driveways free from leaves and pine needles
- Vacuuming leaves from your lawn

FUELING AND REFUELING THE TRIMMER

FUEL MIXTURE

This product is powered by a 2-cycle engine and requires pre-mixing gasoline and 2-cycle lubricant. Pre-mix unleaded gasoline and 2-cycle engine lubricant in a clean 1 gallon container approved for gasoline.

Recommended fuel: This engine is certified to operate on unleaded gasoline intended for automotive use.

Mix Homelite **Premium Exact Mix** lubricant with gasoline according to the instructions on the package. If **Premium Exact Mix** lubricant is not available, use a high quality synthetic 2-cycle engine lubricant, mixed at 2.6 oz. per gallon (US).

Do not use automotive lubricant or 2-cycle outboard lubricant.

NOTE: Premium Exact Mix fuel mix will stay fresh up to 30 days. DO NOT mix quantities larger than usable in a 30 day period.

PREMIUM EXACT MIX (50:1)

GASOLINE	LUBRICANT
1 gallon (US)	2.6 oz.
1 Liter	20 cc (20 ml)

FILLING TANK

- Position the product on its side with the fuel cap pointing upward.
- Clean surface around fuel cap to prevent contamination.
- Loosen fuel cap slowly. Rest the cap on a clean surface.
- Carefully pour fuel into the tank. Avoid spillage.
- Immediately replace fuel cap and hand tighten. Wipe up any fuel spillage.

NOTE: It is normal for smoke to be emitted from a new engine after first use.

WARNING:

Always shut off engine before fueling. Never add fuel to a machine with a running or hot engine. Move at least 30 ft. from refueling site before starting engine. Do not smoke!

STARTING AND STOPPING

See Figures 7 - 8.

Starting the product differs depending on whether the engine is cold or warm. Blower should be on a flat, bare surface for starting.

TO START A COLD ENGINE:

- Place the throttle/stop lever in the high speed ( ) position.
- Slowly press the primer bulb seven (7) times.
- Rotate the choke dial clockwise to the **FULL CHOKE** position.

  NOTE: Each choke position is identified by a detent in the housing.
- Pull the starter grip sharply until engine attempts to run (no more than 4 pulls).
- Rotate the choke dial to the counterclockwise **HALF CHOKE** position.
- Pull the starter grip sharply until the engine runs.
- Allow the engine to run for 10 seconds.
- Rotate the choke dial counterclockwise to the **RUN** position.
- Turn throttle/stop lever to desired speed.

  NOTE: Move the throttle/stop lever to the ( ) position to run the blower at high speed. Move the throttle/stop lever to the ( ) position to run the blower at low speed. Blower speed decreases as the switch is moved closer to the low speed position and increases when the switch is moved closer to the high speed position.

TO START A WARM ENGINE:

- Rotate the choke dial counterclockwise to the **RUN** position.
- Place the throttle/stop lever in the high speed ( ) position.
- Slowly press the primer bulb seven (7) times.
- Pull the starter grip sharply until the engine runs.

TO STOP THE ENGINE:

See Figure 9.

Place the throttle/stop lever in the **STOP (OFF)** position.

IF ASSISTANCE IS REQUIRED STARTING THIS PRODUCT:

Do not return this product to the retail store where it was purchased. Please call our Customer Service Department for any issues you may have.

For Help Call: 1-800-242-4672

⚠ WARNING:

Keep away from all hot surfaces of the blower. Failure to do so could result in possible serious personal injury.

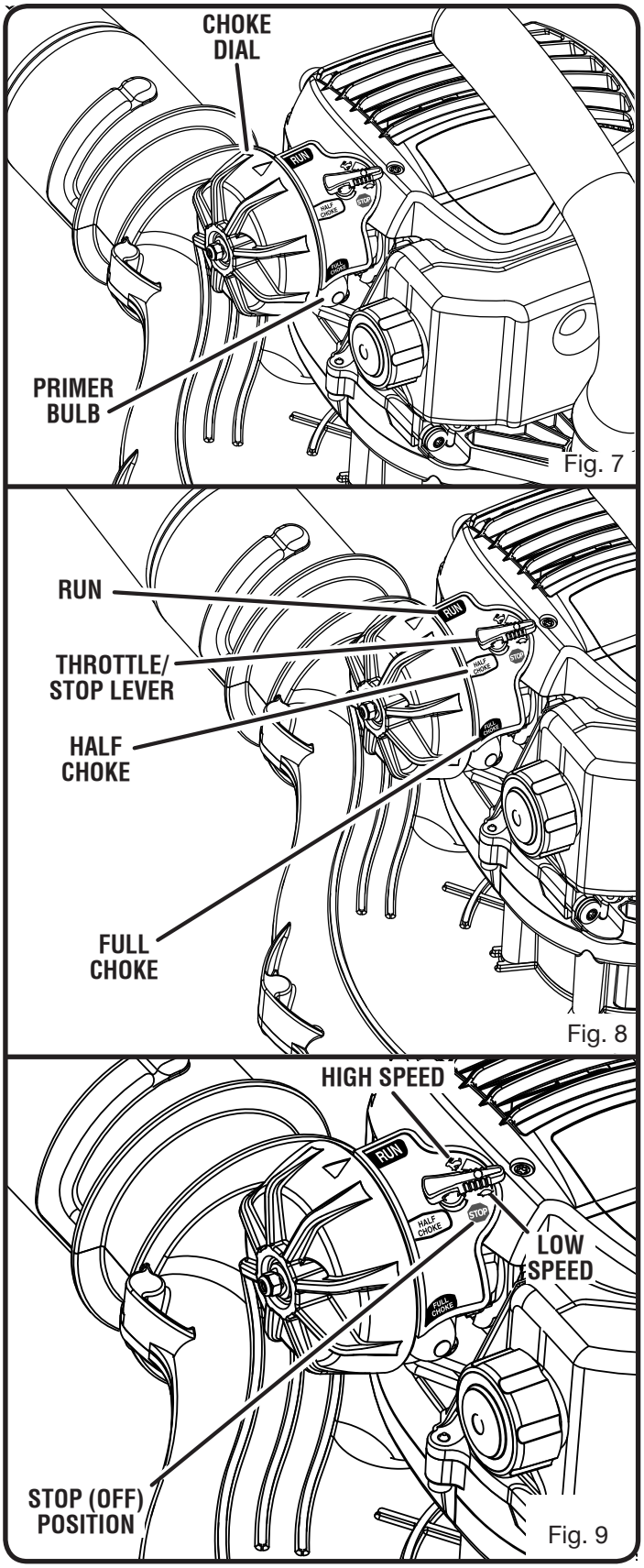

Fig. 7

Fig. 8

Fig. 9

OPERATING THE BLOWER

See Figure 10.

WARNING:

Always hold the blower away from your body, keeping clearance between your body and the product. Any contact with the housing can result in burns and/or other serious personal injury.

- Hold the blower with the handle in your right hand. (Proper operating position is shown in figure 10.)
- To keep from scattering debris, blow around the outer edges of a debris pile. Never blow directly into the center of a pile.
- Operate power equipment at reasonable hours only — not early in the morning or late at night when people might be disturbed. Comply with the times listed in local ordinances.
- To reduce sound levels, limit the number of pieces of equipment used at any one time.
- Operate blower at the lowest possible throttle speed to do the job.
- Check your equipment before operation, especially the muffler, air intakes, and air filters.
- Use rakes and brooms to loosen debris before blowing.
- In dusty conditions, slightly dampen surfaces when water is available.
- Conserve water by using power blowers instead of hoses for many lawn and garden applications, including areas such as gutters, screens, patios, grills, porches, and gardens.
- Watch out for children, pets, open windows or freshly washed cars, and blow debris safely away.
- Use the full blower nozzle extension so the air stream can work close to the ground.

Fig. 10

- After using blowers or other equipment, CLEAN UP! Dispose of debris in trash receptacles.

CAUTION:

Do not place blower on top of or near loose debris. Debris may be sucked into blower intake vent resulting in possible damage to the unit.

VACUUM OPERATION

See Figure 11.

WARNING:

Never run the unit without the vacuum tubes, vacuum bag, handle knob, and handle installed. Failure to heed this warning could result in serious personal injury.

- Install the vacuum tubes, handle, handle knob, and bag. Refer to the *ASSEMBLY* section earlier in this manual.
- Start the blower. Refer to **Starting and Stopping** earlier in this manual.
- Place the vacuum bag strap over your right shoulder. Hold the handle in your right hand and the handle knob with your left hand.
- Move the blower/vacuum from side to side along outer edge of the debris. To avoid clogging, do not place the vacuum tube directly into the debris pile.
- Hold the engine higher than the inlet end of the vacuum tube.
- Always point vacuum tube downhill when working on a hillside.
- To avoid injury to the operator or unit, do not pick up rocks, broken glass, bottles, any type of metal objects, or other similar objects.
- If the vacuum tubes should clog, stop the engine and disconnect the spark plug wire before cleaning out the obstruction. Remove the vacuum tubes and clear the debris from the blower fan housing. Remove the bag and clear the tube. A small rod or stick may be required to clear the entire tube length. Ensure that all debris has been cleared before reassembling the vacuum tubes.

Fig. 11

MAINTENANCE

WARNING:

When servicing, use only identical Homelite replacement parts. Use of any other parts may create a hazard or cause product damage.

WARNING:

Always wear safety goggles or safety glasses with side shields during power tool operation or when blowing dust. If operation is dusty, also wear a dust mask.

WARNING:

Before inspecting, cleaning, or servicing the machine, shut off engine, wait for all moving parts to stop, and disconnect spark plug wire and move it away from spark plug. Failure to follow these instructions can result in serious personal injury or property damage.

GENERAL MAINTENANCE

Avoid using solvents when cleaning plastic parts. Most plastics are susceptible to damage from various types of commercial solvents and may be damaged by their use. Use clean cloths to remove dirt, dust, lubricant, grease, etc.

WARNING:

Do not at any time let brake fluids, gasoline, petroleum-based products, penetrating lubricants, etc., come in contact with plastic parts. Chemicals can damage, weaken or destroy plastic which may result in serious personal injury.

Only the parts shown on the parts list are intended to be repaired or replaced by the customer. All other parts should be replaced at an Authorized Service Center.

LUBRICATION

All of the bearings in this tool are lubricated with a sufficient amount of high grade lubricant for the life of the unit under normal operating conditions. Therefore, no further lubrication is required.

CLEANING THE AIR FILTER SCREEN

See Figures 12 - 13.

For proper performance and long life, keep the air filter screen clean.

- Remove the hex nut, wavy washer, flat washer, and choke dial cover.
- Brush the air filter screen lightly to clean.
- Reinstall the choke dial cover, flat washer, wavy washer, and hex nut.

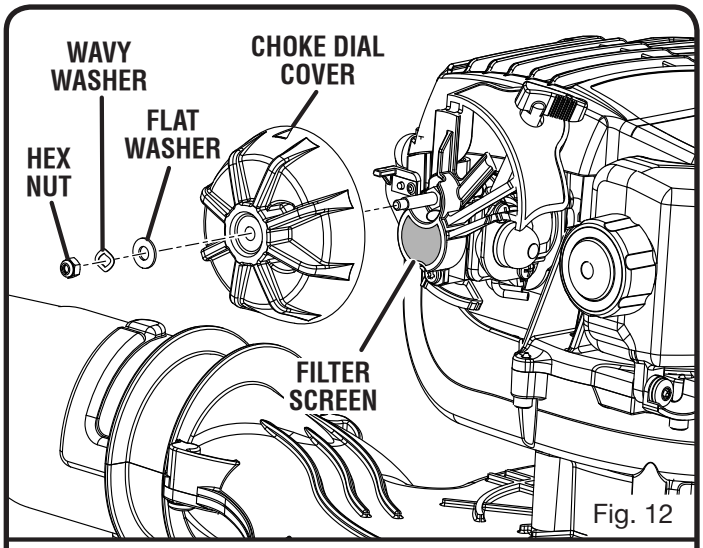

Fig. 12

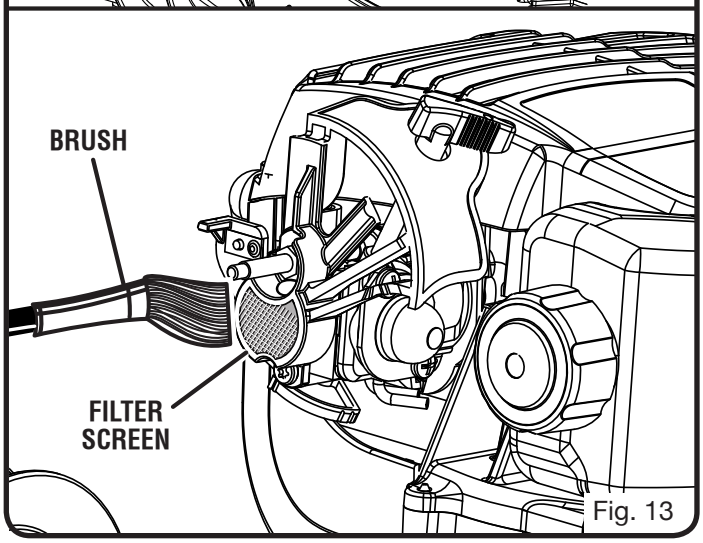

Fig. 13

MAINTENANCE

SPARK PLUG

This engine uses a Champion RCJ6Y or equivalent spark plug with .025 in. electrode gap. Use an exact replacement and replace annually, or more frequently if necessary.

WARNING:

Be careful not to cross-thread the spark plug. Cross-threading will seriously damage the product.

CLEANING THE EXHAUST PORT AND MUFFLER

Depending on the type of fuel used, the type and amount of lubricant used, and/or your operating conditions, the exhaust port and muffler may become blocked with carbon deposits. If you notice a power loss with your gas powered tool, you may need to remove these deposits to restore performance. We highly recommended that only qualified service technicians perform this service.

VACUUM BAG

A dirty bag will reduce performance. To clean the bag, turn it inside out and shake. Wash the bag in soapy water at least once a year. To obtain a replacement bag, see **How to Obtain Replacement Parts** on the back page of this manual.

SPARK ARRESTOR

The spark arrestor must be replaced every 25 hours or yearly to ensure proper performance of the product. Spark arrestors may be in different locations depending on the model purchased. Please contact the nearest service dealer for servicing your spark arrestor.

WARNING:

Never run the blower without the spark arrestor in place. Failure to do so could result in a fire that could cause serious personal injury.

FUEL CAP

WARNING:

A leaking fuel cap is a fire hazard and must be replaced immediately. Failure to do so could result in a fire that could cause serious personal injury.

The fuel cap contains a non-serviceable filter and a check valve. A clogged fuel filter will cause poor engine performance. If performance improves when the fuel cap is loosened, the check valve may be faulty or filter clogged. Replace the fuel cap if required.

STORING THE PRODUCT

- Clean all foreign material from the product. Store it in a well-ventilated place that is inaccessible to children. Keep away from corrosive agents such as garden chemicals and de-icing salts.
- Abide by all Federal and local regulations for the safe storage and handling of gasoline.

When storing 1 month or longer:

- Drain all fuel from tank into a container approved for gasoline. Run engine until it stops.

TROUBLESHOOTING

Problem	Possible Cause	Solution
Engine will not start.	No spark.	Check spark. Remove spark plug. Reattach the spark plug cap and lay spark plug on metal cylinder. Pull the starter rope and watch for spark at spark plug tip. If there is no spark, repeat test with a new spark plug.
	No fuel.	Push primer bulb until bulb is full of fuel. If bulb does not fill, primary fuel delivery system is blocked. Contact a servicing dealer. If primer bulb fills, engine may be flooded, proceed to next item.
	Engine is flooded.	Remove spark plug, turn product so spark plug hole is aimed at the ground. Rotate the choke dial to "RUN" position and pull starter cord 10 to 15 times. This will clear excess fuel from engine. Clean and reinstall spark plug. Pull starter three times with choke dial at "RUN". If engine does not start, rotate choke dial to "FULL CHOKE" position and repeat normal starting procedure. If engine still fails to start, repeat procedure with a new spark plug.
	Starter rope pulls harder now than when new.	Contact a servicing dealer.
Engine starts but will not accelerate.	Engine requires approximately three minutes to warm up.	Allow engine to completely warm up. If engine does not accelerate after three minutes, contact a servicing dealer.
Engine starts but will only run at high speed at half choke.	Carburetor requires adjustment.	Contact a servicing dealer.
Engine does not reach full speed and emits excessive smoke.	Check lubricant fuel mixture.	Use fresh fuel and the correct 2-cycle lubricant mix.
	Air filter is dirty.	Clean air filter. Refer to **Cleaning the Air Filter Screen** earlier in this manual.
	Spark arrestor screen is dirty.	Contact a servicing dealer.

WARRANTY

LIMITED WARRANTY STATEMENT

Homelite Consumer Products, Inc., ("Homelite") warrants to the original retail purchaser that this HOMELITE brand outdoor product is free from defect in material and workmanship and agrees to repair or replace, at Homelite's, discretion, any defective product free of charge within these time periods from the date of purchase.

- One year for the following units if used for personal, family, or household use: all MightyLite 26CS and MightyLite 26B models;
- Two years for all other models if used for personal, family, or household use;
- 90 days for any unit used for other purposes, such as rental or commercial.

This warranty extends to the original retail purchaser only and commences on the date of the original retail purchase.

Any part of the this product manufactured or supplied by Homelite and found in the reasonable judgment of Homelite to be defective in material or workmanship will be repaired or replaced without charge for parts and labor by a Homelite authorized service center.

The product, including any defective part, must be returned to an authorized service dealer within the warranty period. The expense of delivering the product to the dealer for warranty work and the expense of returning it back to the owner after repair or replacement will be paid by the owner. Homelite's responsibility in respect to claims is limited to making the required repairs or replacements and no claim of breach of warranty shall be cause for cancellation or rescission of the contract of sale of any HOMELITE brand product. Proof of purchase will be required by the dealer to substantiate any warranty claim. All warranty work must be performed by a Homelite authorized service center.

This warranty is limited to ninety (90) days from the date of original retail purchase for any HOMELITE brand product that is used for rental or commercial purposes, or any other income-producing purpose.

This warranty does not cover any HOMELITE brand product that has been subject to misuse, neglect, negligence, or accident, or that has been operated in any way contrary to the operating instructions as specified in this operator's manual. This warranty does not apply to any damage to the product that is the result of improper maintenance or to any product that has been altered or modified. The warranty does not extend to repairs made necessary by normal wear or by the use of parts or accessories which are either incompatible with the HOMELITE brand product or adversely affect its operation, performance, or durability. In addition, this warranty does not cover:

A. Tune-ups – Spark Plugs, Carburetor, Carburetor Adjustments, Ignition, Filters
B. Wear items – Bump Knobs, Outer Spools, Cutting Lines, Inner Reels, Starter Pulleys, Starter Ropes, Drive Belts, Tines, Felt Washers, Hitch Pins, Mulching Blades, Blower Fans, Blower and Vacuum Tubes, Vacuum Bags and Straps, Guide Bars, Saw Chains

Homelite reserves the right to change or improve the design of any HOMELITE brand product without assuming any obligation to modify any product previously manufactured.

ALL IMPLIED WARRANTIES ARE LIMITED IN DURATION TO THE STATED WARRANTY PERIOD. ACCORDINGLY, ANY SUCH IMPLIED WARRANTIES INCLUDING MERCHANTABILITY, FITNESS FOR A PARTICULAR PURPOSE, OR OTHERWISE, ARE DISCLAIMED IN THEIR ENTIRETY AFTER THE EXPIRATION OF THE APPROPRIATE TWO-YEAR, ONE-YEAR, OR NINETY-DAY WARRANTY PERIOD. HOMELITE'S OBLIGATION UNDER THIS WARRANTY IS STRICTLY AND EXCLUSIVELY LIMITED TO THE REPAIR OR REPLACEMENT OF DEFECTIVE PARTS AND HOMELITE DOES NOT ASSUME OR AUTHORIZE ANYONE TO ASSUME FOR THEM ANY OTHER OBLIGATION. SOME STATES DO NOT ALLOW LIMITATIONS ON HOW LONG AN IMPLIED WARRANTY LASTS, SO THE ABOVE LIMITATION MAY NOT APPLY TO YOU. HOMELITE ASSUMES NO RESPONSIBILITY FOR INCIDENTAL, CONSEQUENTIAL, OR OTHER DAMAGES INCLUDING, BUT NOT LIMITED TO, EXPENSE OF RETURNING THE PRODUCT TO AN AUTHORIZED HOMELITE SERVICE CENTER AND EXPENSE OF DELIVERING IT BACK TO THE OWNER, MECHANIC'S TRAVEL TIME, TELEPHONE OR TELEGRAM CHARGES, RENTAL OF A LIKE PRODUCT DURING THE TIME WARRANTY SERVICE IS BEING PERFORMED, TRAVEL, LOSS OR DAMAGE TO PERSONAL PROPERTY, LOSS OF REVENUE, LOSS OF USE OF THE PRODUCT, LOSS OF TIME, OR INCONVENIENCE. SOME STATES DO NOT ALLOW THE EXCLUSION OR LIMITATION OF INCIDENTAL OR CONSEQUENTIAL DAMAGES, SO THE ABOVE LIMITATION OR EXCLUSION MAY NOT APPLY TO YOU.

This warranty gives you specific legal rights, and you may also have other rights which vary from state to state.

This warranty applies to all HOMELITE brand products manufactured by or for Homelite and sold in the United States and Canada.

To locate your nearest Homelite authorized service center, dial 1-800-242-4672 or log on to our website at www.homelite.com.

WARRANTY

THE FOLLOWING CALIFORNIA AIR RESOURCES BOARD (CARB) STATEMENT ONLY APPLIES TO MODEL NUMBERS REQUIRED TO MEET THE CARB REQUIREMENTS.

HOMELITE CONSUMER PRODUCTS, INC., LIMITED WARRANTY STATEMENT FOR FEDERAL AND CALIFORNIA EMISSION CONTROL SYSTEMS NON-ROAD AND SMALL OFF-ROAD ENGINES

YOUR WARRANTY RIGHTS AND OBLIGATIONS

The U.S. Environmental Protection Agency (EPA), the California Air Resources Board (CARB), and Homelite Consumer Products, Inc., are pleased to explain the Emissions Control System Warranty on your 2007 model year non-road or small off-road engine. In California, new equipment that uses small off-road engines must be designed, built, and equipped to meet the state's stringent anti-smog standards. In other states, new 2000 and later model year non-road engines must be designed, built, and equipped at the time of sale to meet the U.S. EPA regulations for small non-road engines. The non-road engine must be free from defects in materials and workmanship which cause it to fail to conform with U.S. EPA standards for the first two years of engine use from the date of sale to the ultimate purchaser. Homelite Consumer Products, Inc., must warrant the emission control system on your non-road or small off-road engine for the period of time listed above provided there has been no abuse, neglect, or improper maintenance of your non-road or small off-road engine.

Your emission control system may include parts such as the carburetor or fuel injection system, the ignition system, catalytic converters, fuel tanks, valves, filters, clamps, connectors, and other associated components. Also included may be hoses, belts and connectors, and other emission-related assemblies.

Where a warrantable condition exists, Homelite Consumer Products, Inc., will repair your non-road or small off-road engine at no cost to you, including diagnosis, parts, and labor performed at an authorized service center for HOMELITE® brand outdoor products.

MANUFACTURER'S WARRANTY COVERAGE:

This product's emissions control system is warranted for two years. If any emission-related part on your engine is defective, the part will be repaired or replaced by Homelite Consumer Products, Inc., free of charge.

OWNER'S WARRANTY RESPONSIBILITIES

(a) As the non-road or small off-road engine owner, you are responsible for the performance of the required maintenance listed in your operator's manual. Homelite Consumer Products, Inc., recommends that you retain all receipts covering maintenance on your non-road or small off-road engine, but Homelite Consumer Products, Inc., cannot deny warranty solely for the lack of receipts or for your failure to ensure the performance of all scheduled maintenance. Any replacement part or service that is equivalent in performance and durability may be used in non-warranty maintenance or repairs, and shall not reduce the warranty obligations of Homelite Consumer Products, Inc.

(b) As the non-road or small off-road engine owner, you should be aware, however, that Homelite Consumer Products, Inc., may deny you warranty coverage if your non-road or small off-road engine or a part has failed due to abuse, neglect, improper maintenance, or unapproved modifications.

(c) You are responsible for presenting your non-road or small off-road engine to an authorized service dealer as soon as a problem exists. The warranty repairs should be completed in a reasonable amount of time, not to exceed 30 days.

If you have any questions regarding your warranty rights and responsibilities, you should contact a Homelite Consumer Products, Inc., Customer Representative at 1-800-242-4672.

DEFECT WARRANTY COVERAGE REQUIREMENTS:

(a) The warranty period begins on the date the engine or equipment is delivered to an ultimate purchaser.

(b) General Emissions Warranty Coverage. Homelite Consumer Products, Inc., warrants to the ultimate purchaser and each subsequent purchaser that your non-road or small off-road engine is designed, built, and equipped at the time of sale to conform with all applicable regulations adopted by the California Air Resources Board or the United States Environmental Protection Agency; and that it is free from defects in materials and workmanship which cause the engine to fail to conform with applicable regulations for a period of two years from the date the non-road or small off-road engine is purchased by the initial purchaser.

(c) The warranty on emissions-related parts will be interpreted as follows: Any warranted part that is not scheduled for replacement as required in the Emissions Maintenance Schedule and Warranty Parts List set forth below is warranted for two years. If any such part (including any part that is scheduled only for regular inspection) fails during the period of warranty coverage, it will be repaired or replaced at any HOMELITE® Authorized Service Center at no charge. Any such part repaired or replaced under warranty will be warranted for the remaining warranty period. A statement to the effect of "repair or replace as necessary" would not reduce the period of warranty coverage. Any warranted part that is scheduled for replacement as required maintenance in the Emissions Maintenance Schedule and Warranty Parts List is warranted for the period of time prior to the first scheduled replacement point for that part. Any such part repaired or replaced under warranty is warranted for the remainder of the period prior to the first scheduled replacement point, and will be repaired or replaced at any HOMELITE® Authorized Service Center for no charge until that replacement point is reached.

Homelite Consumer Products, Inc., shall remedy warranty defects at any authorized HOMELITE® Authorized Service Center, including any distribution center that may be franchised to service the subject engines. Any diagnostic work done at a HOMELITE® Authorized Service Center shall be free of charge to the owner if such work determines that a warranted part is defective. Any manufacturer-approved or equivalent replacement part may be used for any warranty maintenance or repairs on emission-related parts, and must be provided free of charge to the owner if the part is still under warranty. Homelite Consumer Products, Inc., is liable for damages to other engine components caused by the failure of a warranted part still under warranty.

Add-on or modified parts that are not exempted by the California Air Resource Board may not be used. The use of any non-exempted add-on or modified parts will be grounds for disallowing a warranty claim. Homelite Consumer Products, Inc., will not be liable to warrant failures of warranted parts caused by the use of a non-exempted add-on or modified part.

The California Air Resources Board's Emission Warranty Parts List specifically defines the emission-related warranted parts. (EPA's regulations do not include a parts list, but the EPA considers emission-related warranted parts to include all the parts listed below.) Homelite Consumer Products, Inc., will provide any documents that describe its warranty procedures or policies within five days upon request by the California Air Resources Board.

EMISSIONS PARTS LIST

Emissions parts vary from product to product. Your emissions control system warranty applies to any of the following components that may be included on your product:

(1) Fuel Metering System
- (i) Carburetor and internal parts (and/or pressure regulator or fuel injection system).
- (ii) Air/fuel ratio feedback and control system.
- (iii) Cold start enrichment system.
- (iv) Fuel Tank.

(2) Air Induction System
- (i) Controlled hot air intake system.
- (ii) Intake manifold.
- (iii) Air filter.

(3) Ignition System
- (i) Spark Plugs.
- (ii) Magneto or electronic ignition system.
- (iii) Spark advance/retard system.

(4) Exhaust Gas Recirculation (EGR) System
- (i) EGR valve body and carburetor spacer, if applicable.
- (ii) EGR rate feedback and control system.

(5) Air Injection System
- (i) Air pump or pulse valve.
- (ii) Valves affecting distribution of flow.
- (iii) Distribution manifold.

(6) Catalyst or Thermal Reactor System
- (i) Catalytic converter.
- (ii) Thermal reactor.
- (iii) Exhaust manifold.

(7) Particulate Controls
- (i) Traps, filters, precipitators, and any other device used to capture particulate emissions.

(8) Miscellaneous Items Used in Above Systems
- (i) Electronic controls.
- (ii) Vacuum, temperature, and time sensitive valves and switches.
- (iii) Hoses, belts, connectors, and assemblies.

Homelite Consumer Products, Inc., will furnish with each new engine written instructions for its maintenance and use by the owner.

The Emissions Compliance Period referred to on the Emissions Compliance label indicates the number of operating hours for which the engine has been shown to meet Federal emission requirements. Category C=50 hours, B=125 hours, and A=300 hours.

WARRANTY

THIS PRODUCT WAS MANUFACTURED WITH A CATALYST MUFFLER

Congratulations! You have made an investment toward protecting the environment. In order to maintain this product's original emission level, please refer to the maintenance section below.

EMISSIONS MAINTENANCE SCHEDULE AND WARRANTED PARTS LIST

Emissions Parts	Inspect Before Each Use	Clean Every 5 Hours	Replace Every 25 Hours or Yearly	Clean Every 25 Hours or Yearly	Replace Every 50 Hours
CATALYTIC MUFFLER ASSEMBLY					X
AIR FILTER ASSY					
includes:					
Filter		X			
FUEL TANK ASSY					
includes:					
Fuel Lines	X				
Fuel Cap	X				
IGNITION ASSY					
includes:					
Spark Plug			X		

ALL EMISSIONS-RELATED PARTS ARE WARRANTED FOR TWO YEARS OR FOR THE PERIOD OF TIME PRIOR TO THE PARTS FIRST SCHEDULED REPLACEMENT WHICHEVER COMES FIRST.

MAKE THE MOST OF YOUR PURCHASE!

Go to www.homelite.com and register your new tool on-line.

Your product has been fully tested prior to shipment to ensure your complete satisfaction.

For any questions about operating or maintaining your product, call the Homelite Help Line!

To register your Homelite product or set up your eBox™ account by regular mail, please print the following information on a 3 in. x 5 in. card or standard postcard: your name, mailing address, phone numbers, email address, Homelite product(s) purchased with item number from package, and serial number for each product. Mail the card to: Homelite Consumer Products, Attn. Homelite Registration, 1428 Pearman Dairy Road, Anderson, SC 29625.To receive information on our company and products, please include the following statement on your registration card: "Send me information on your products and company using the contact information I am providing with this product registration."

NOTES

Homelite®

OPERATOR'S MANUAL

26cc MightyLite Blower/Vac

UT08550/UT08951

WARNING:

The engine exhaust from this product contains chemicals known to the State of California to cause cancer, birth defects or other reproductive harm.

CALIFORNIA PROPOSITION 65

- PARTS AND SERVICE

Prior to requesting service or purchasing replacement parts, please obtain your model and serial number from the product data plate.

- MODEL NUMBER UT08550/UT08951
- SERIAL NUMBER _____

- HOW TO OBTAIN REPLACEMENT PARTS:

Replacement parts can be purchased online at **www.homelite.com** or by calling 1-800-242-4672. Replacement parts can also be obtained at one of our Authorized Service Centers.

- HOW TO LOCATE AN AUTHORIZED SERVICE CENTER:

Authorized Service Centers can be located online at **www.homelite.com** or by calling 1-800-242-4672.

- HOW TO OBTAIN CUSTOMER OR TECHNICAL SUPPORT:

To obtain Customer or Technical Support please contact us at 1-800-242-4672.

HOMELITE CONSUMER PRODUCTS, INC.
1428 Pearman Dairy Road
Anderson, SC 29625
Phone 1-800-242-4672
www.homelite.com

987000-050
10-18-07 (REV:02)